PRODUCT BRIEF

VSC9135
VSC9138

VSC9135 (LOVCAT48) 2.5 Gbps Multi-service High Order/Low Order Virtual Concatenation Mapper

VSC9138 (LOVCAT192) 10 Gbps Multi-service High Order/Low Order Virtual Concatenation Mapper

The VersaCAT family adapts Ethernet technology to the WAN by efficiently provisioning Ethernet services across existing transport infrastructures while optimizing bandwidth utilization using hitless rate adaptation. It includes a suite of 2.5G and 10G mappers (HOVCAT, HOVCATe, LOVCAT) and multi-protocol WAN MACs (Meigs-IIE, Campbell-I, and Barrington) that support Virtual Concatenation, fully integrated LCAS and GFP, as well as provides extensive Layer 2 aggregation, encapsulation and management features. More specifically this family is used for efficient provisioning of data services from Ethernet (10 Mbps) to 10 Gigabit Ethernet (10 Gbps) and various storage and video protocols over WAN transport infrastructure, while optimizing bandwidth utilization using hitless rate adaptation.

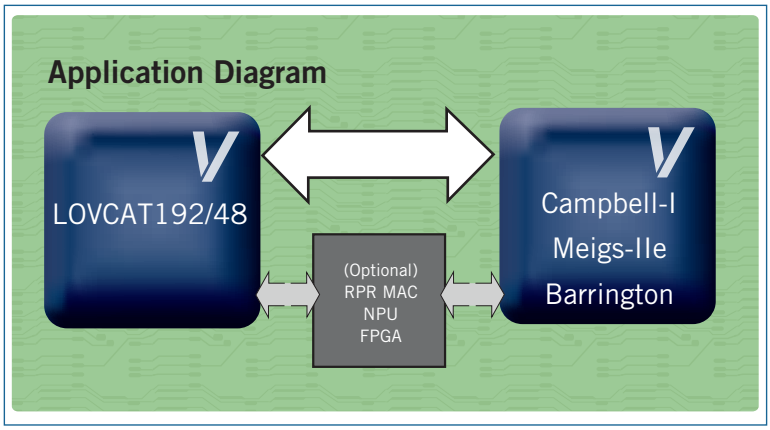

APPLICATIONS

- SONET/SDH Multi-service Provisional Platforms (MSPPs)
- Next generation SONET/SDH Metro Ethernet systems
- Resiliant Packaging Ring (RPR) applications

SPECIFICATIONS

- 128 Virtual Concatenation Groups (VCGs) of STS-1/VC-3, STS-3C/VC-4, VT1.5/VT2.0, and TU-12/TU-11
- High Order Path Overhead (POH) ports for external sourcing or processing
- System packet interface Level 4, Phase 2, 16-bit (SPI-4.2)
- System packet interface Level 3, 32-bit (SPI-3)
- 72-bit external DDR SDRAM interface
- Dual-rate STS-48/STM-16 (TFI-5) or STS-12/STM-4 working and protection backplane interfaces
- Power Dissipation: 9W (LOVCAT192) 7W (LOVCAT48)
- 1760 HFCBGA package

Features

- 10G or 2.5G bandwidth support
- 128 independent channels (GFP, HDLC)
- Hitless Link Capacity Adjustment Scheme (LCAS)
- Virtual Concatenation (VC) and Contiguous Concatenation
- Support for Generic Framing Protocol (GFP)
- VC groups with Higher-order (HO) granularity of STS-1/VC-3, STS-3C/VC-4s as well as Lo-order (LO) granularity of VT1.5/VT2.0, TU-12/TU-11
- OIF compliant SPI-3 and SPI-4.2 interfaces
- Dual-rate STS-48/STM-16 (TFI-5) or TST-12/STM-4 working and protection backplane interfaces
- Pin compatibility with existing HOVCAT products
- Software device drivers and diagnostics included
- Third generation VC Mapper device

BLOCK DIAGRAM:

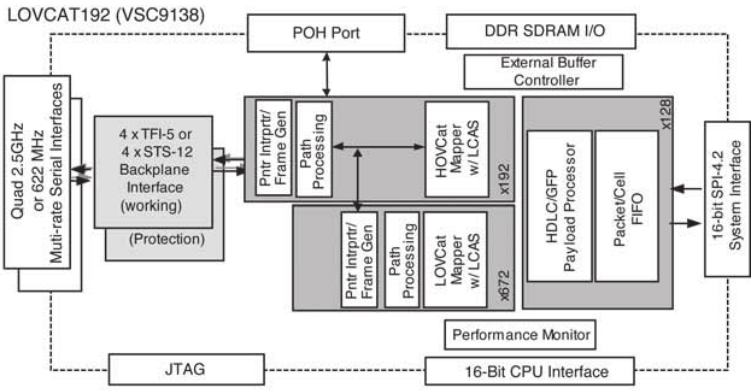

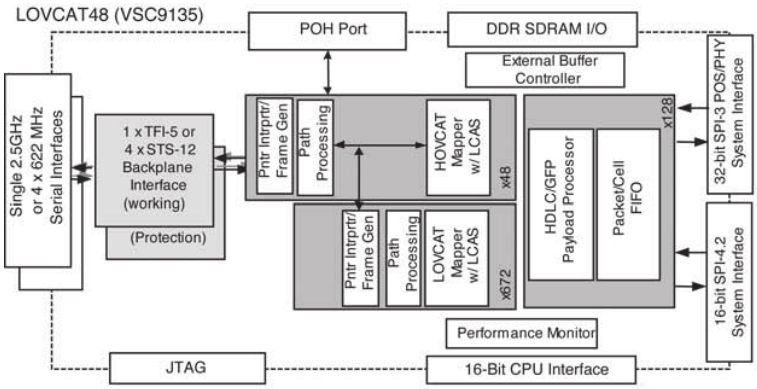

Benefits

- Support for multiple linecard densities with pin compatible devices
- High VC group count allows dense termination of multiple network endpoints in a single device
- Includes LCAS application code enables and standards compliant hitless LCAS implementation
- Concurrent support for legacy contiguous concatenation and virtual concatenation within the same device
- Encapsulates received data from SPI-3/4.2 interface with a GFP header
- Support for any combination of high and low order tributaries
- Supports connection to both 2.5G and 10G NPUs or FPGAs to provide next generation Metro Ethernet services
- Direct connection to existing SONET/SDH TDM backplane at 622M and 2.5G without external backplane device
- Full suite of software drivers and diagnostic speeds development time
- Built on successful HOVCAT hardware and software platform for easy design migration

Related Vitesse Products

Visit www.vitesse.com for information about other related Vitesse products.

Vitesse Semiconductor Corporation
741 Calle Plano • Camarillo, CA 93012 USA • Tel: +1.800.VITESSE • +1.805.388.3700 • Fax: +1.805.987.5896 • www.vitesse.com

Vitesse, ASIC-Friendly, FibreTimer, TimeStream and Snoop Loop are trademarks of Vitesse Semiconductor Corporation.
© 2005 by Vitesse Semiconductor Corporation. VPPD-01137 Revision 1.0. All Rights Reserved. Products and specifications may change at any time without notice and Vitesse assumes no for responsibility the information provided herein.